ENFORCER® Sensor

Retro-Reflective Photoelectric Sensor

E-931-S35RRQ

Range: 35ft. (11m)

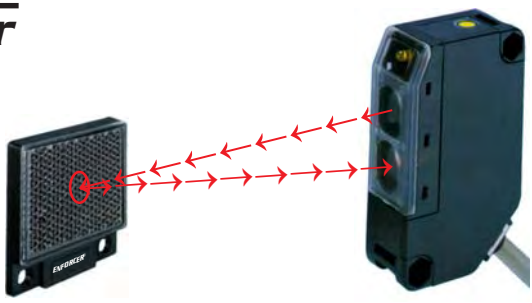

INSTALLATION MANUAL

Features:

- Weatherproof (IP 66) design for indoor/outdoor use.
- Dark ON operation.
- Pre-wired 6-foot cord.
- Adjustable sensing distance.
- NO/NC/COM relay output.
- Compact size.

Typical Applications:

- Safety sensor for garage doors or outdoor gates.
- Overhead door security sensor.
- Industrial automation –– Detect small objects on a manufacturing line.
- Entry detection for storefronts.
- Assist in measuring parking distance.
- Alarm sensor.

Includes:

- Reflector (E-931ACC-R)
- Transmitter/Receiver (E-931-S35RRQ)
- Sensor mounting bracket (E-931ACC-BLS1)
- Reflector mounting bracket (E-931ACC-BLR1)
- Mounting hardware also included.

Dimensions:

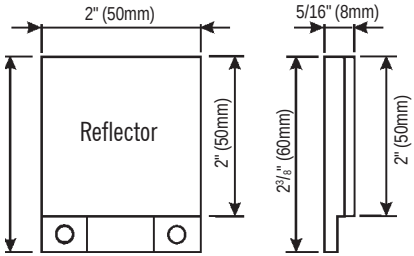

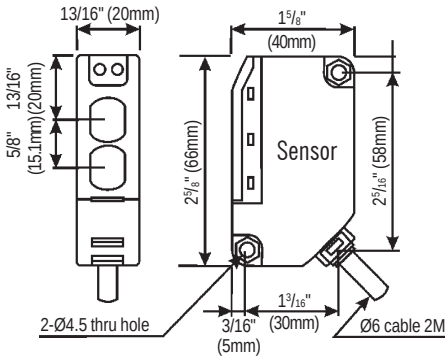

Caution:

- This sensor was not designed to prevent bodily injury or loss of life.
- This sensor was not designed for use in environments where there is the possibility of explosive gasses present.
- Use of this sensor in certain security applications may be regulated by local laws or codes. SECO-LARM is not responsible for compliance with such laws or codes.
- Using this sensor near reflective surfaces may cause the unit to malfunction.

Sample Installations:

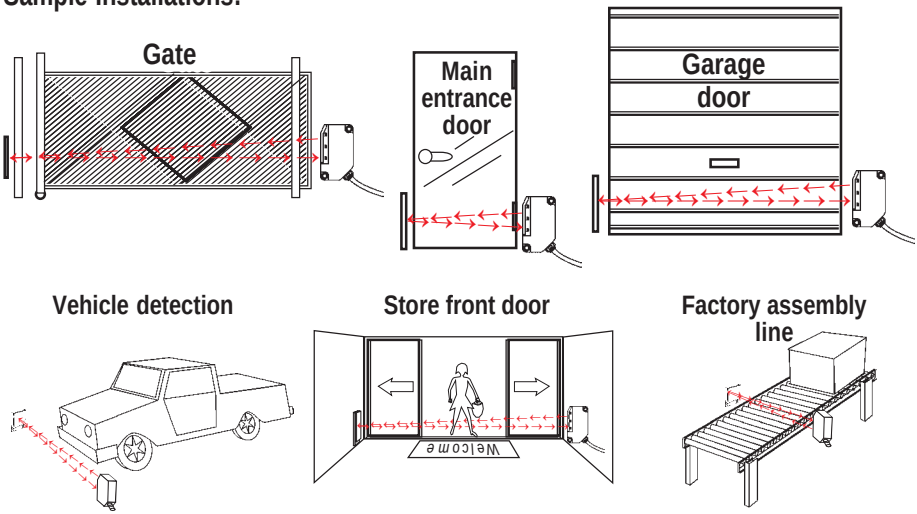

Wiring:

Connection (5 wires)

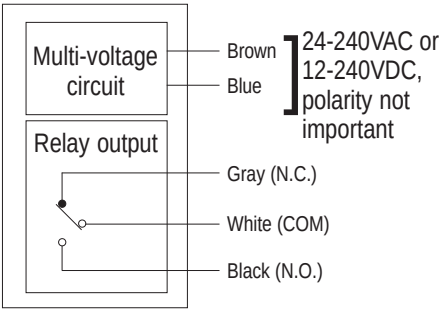

Note:

1. Can be connected to AC or DC voltage.
2. Maximum cable extension length is 325 feet (100 meters).

Accessories:

E-931ACC-R

E-931ACC-RC

E-931ACC-HR

Mounting the Sensor:

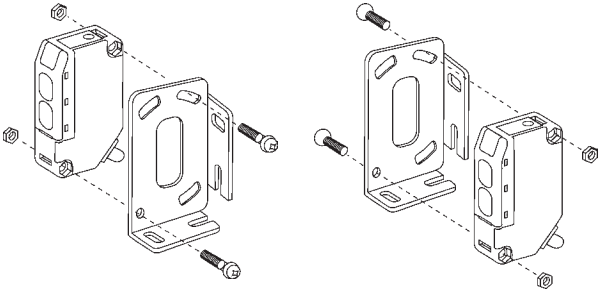

Mounting the Reflector:

Sample Fixed Mounting:

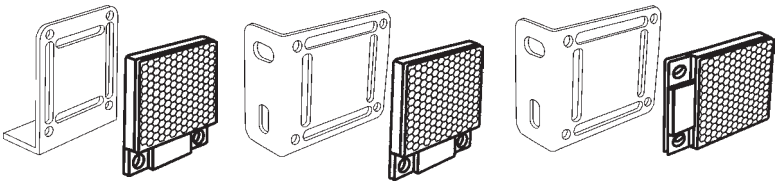

Samples For Horizontally Adjusting Mounting:

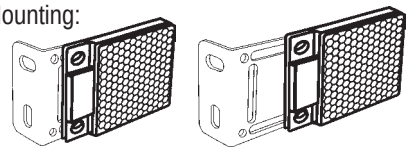

Samples For Vertically Adjusting Mounting:

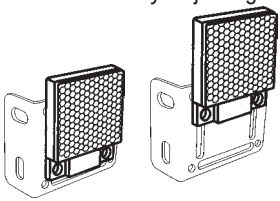

Installation and Adjustment:

LED Functions:

- Red LED – When ON, it indicates the sensor is triggered.
- Yellow LED – When ON, it indicates that the sensor is properly aligned with the reflector, and the sensor is not triggered.

Sensitivity Adjustment Functions:

- Min. Setting – The infrared signal emitted by the sensor is at its minimum or weakest. This means the sensor can be easily triggered by small obstructing objects.
- Max. Setting – The infrared signal emitted by the sensor is at its maximum or strongest. This means the sensor cannot be easily triggered by small obstructing objects.

Installation:

1. Mount the reflector and the sensor so they face each other.
2. Connect power to the sensor. Typically the red LED will turn ON indicating that the sensor and reflector are not yet properly aligned. If the yellow LED is ON (red LED OFF), it indicates that the sensor and reflector are aligned (although it still may be necessary to slightly adjust the alignment).
3. Turn the sensitivity knob to Max.
4. To find the correct alignment, slowly adjust the angles of the sensor (and/or reflector) up and down and right and left.

   NOTE 1: Correct alignment is reached when the red LED turns OFF and the yellow LED turns ON.

   NOTE 2: If both LEDs are OFF, the sensor is at the edge of sensing the signal, and may not work properly.

Adjusting Sensitivity:

After the sensor and the reflector have been properly installed, the next step is to adjust the sensor sensitivity.

1. Turn the sensitivity knob counterclockwise to “Min.”
2. Slowly turn the sensitivity knob clockwise until the yellow LED turns ON. Mark this position “A”.

   NOTE: If the yellow LED is ON when the sensitivity knob has been adjusted to “Min.”, then position “A” will be at “Min.”
3. Put the object to be detected between the sensor and reflector (in about the place where the object would normally be detected by the sensor). The yellow LED should turn OFF (red LED is ON)
4. Slowly turn the sensitivity knob to clockwise until the yellow LED turns ON. Mark this position “B”.

   NOTE: If the yellow LED does not turn ON even when the sensitivity knob has been adjusted to “Max.” then position “B” will be at “Max.”.
5. Turn the sensitivity knob counterclockwise until it is set at the center (midpoint) between points “A” and “B”. This will be the suggested sensitivity setting.

Testing:

1. Power up the sensor. The yellow LED should be ON; the red LED should be OFF.
2. Pass the object to be detected between the sensor and reflector. The red LED should turn ON and the yellow LED should turn OFF. This indicates that the object has been detected.

   NOTE: If a shiny object, such as a chrome-plated or stainless-steel item, or something with reflective tape, will be passing between the sensor and reflector, the sensor may not be able to detect it. In this case, it may be necessary to turn the sensitivity knob counterclockwise until the desired sensitivity setting is obtained.

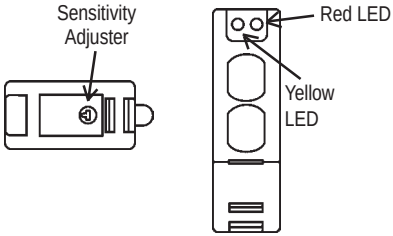

Specifications:

Model Number	E-931-S35RRQ		
Type	Retro-Reflective Photoelectric Sensor		
Sensing Range	0.5' to 35' (0.1 - 11 m)		
Voltage Supply	12-240 VDC or 24-240 VAC		
Current Drain		Stand by	Active
	12VDC	20mA	40mA
	24VDC	10mA	20mA
Response Time	10ms (max.)		
Light Source	IR LED		
LEDs	Yellow LED (Alignment), Red LED (trigger)		
Trigger Output	N.O./N.C./Common		
Switching Capacity	1A @ 50VAC		
Enclosure	IP 66 Weatherproof		
Ambient Temperature	-4^0~131^0F (-20^0~55^0C)		
Mounting Brackets for Sensor and Reflector	Included		

Troubleshooting:

Trouble	Possible Origin(s)	Remedy(s)
Sensor does not detect the object.	1) Sensor sensitivity is not properly set. 2) Object may have a reflective surface which confuses sensor.	Change the angle of the sensor or readjust the sensitivity setting.
Yellow LED does not turn on.	1) Dirty sensor and/or reflector. 2) Reflector and/or sensor is misaligned.	1) Clean the sensor and reflector with a damp (not wet) cloth. 2) Adjust the reflector and/or sensor for proper alignment.
Red LED lights when object is detected, but no output.	No continuity between sensor and alarm device.	Check cable from sensor to alarm device. Test sensor.

WARRANTY This SECO-LARM product is warranted against defects in material and workmanship while used in normal service for a period of one (1) year from the date of sale to the original consumer customer. SECO-LARM's obligation is limited to the repair or replacement of any defective part if the unit is returned, transportation prepaid, to SECO-LARM.

This Warranty is void if damage is caused by or attributed to acts of God, physical or electrical misuse or abuse, neglect, repair, or alteration, improper or abnormal usage, or faulty installation, or if for any other reason SECO-LARM determines that such equipment is not operating properly as a result of causes other than defects in material and workmanship.

The sole obligation of SECO-LARM, and the purchaser's exclusive remedy, shall be limited to replacement or repair only, at SECO-LARM's option. In no event shall SECO-LARM be liable for any special, collateral, incidental, or consequential personal or property damages of any kind to the purchaser or anyone else.

NOTICE: The information and specifications printed in this manual are current at the time of publication. However, the SECO-LARM policy is one of continual development and improvement. For this reason, SECO-LARM reserves the right to change specifications without notice. SECO-LARM is also not responsible for misprints or typographical errors.
Copyright © 2009 SECO-LARM U.S.A., Inc. All rights reserved. This material may not be reproduced or copied, in whole or in part, without the written permission of SECO-LARM.

SECO-LARM® U.S.A., Inc.
16842 Millikan Avenue, Irvine, CA 92606
Tel: 800-662-0800 / 949-261-2999 Fax: 949-261-7326
Website: www.seco-larm.com
E-mail: sales@seco-larm.com