# ARFR

# RADIO FREQUENCY RECEIVER- MANUAL

## INTRODUCTION

Pach and Company thanks and congratulates you on the purchase of your Radio Frequency Receiver (ARFR) and Transmitter (ARFT). The

Radio Receiver and transmitter are designed specifically for AeGIS 4000P, 7000P Series and 8000P Series. Limited to 15 transmitters

## SPECIFICATIONS

Power Input: 11-24 VAC/DC
Relay: Single relay, dry contact output

***ARFT, ARFHT AND ARFANT ARE SOLD SEPERATELY***

The optional ARFANT extends the RF receiver range up to 1200 feet (open air) with existing remotes. The ARFANT comes with a 9 feet cable which easily plugs into the 3-pin antenna port located on the ARFR motherboard (see image below).

## WIRING DIAGRAM

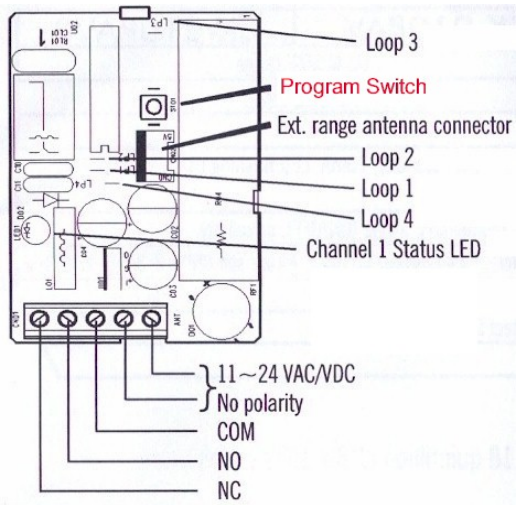


**Table 1:** To program outputs, open case and find the jumpers marked LP1, LP2, LP3, and LP4 . Cut these jumpers, if needed, as follows:

| | 4-SEC. MOMENTARY | 1-SEC. MOMENTARY | TOGGLE | VALIDITY |
|---|---|---|---|---|
| LP1 | UNCUT | UNCUT | CUT | CUT |
| LP2 | UNCUT | CUT | UNCUT | CUT |
| LP3 | CUT LP3 TO USE EXTERNAL ANTENNA | | | |
| LP4 | CUT LP4 FOR 16~24VAC/DC POWER INPUT (for SK-910RA only) | | | |

## PROGRAMMING THE ARFT AND ARFHT

1. Press Program Switch for three seconds. The green LED (channel 1 Status LED) will start to clash quickly
2. While the green LED flashing quickly, press the transmitter button. The green LED will flash once and then turn off to show that the button was learned. (The green LED will flash for 15 seconds (programming mode) then turn off.
3. Repeat steps 1 and 2 to program more button

1. The receiver will only learn the code button once. The LED will turn steady ON for 1 second if try to program same button
2. The receiver will take up to 15 transmitters. If attempting to program more than 15 transmitters, the first transmitter code will be deleted from the receiver (first in, first out)
3. CLEAR ALL CODES, press Program Switch for three seconds. When the green LED starts flashing, press the Program Switch again for three seconds. The LED will flash twice to indicate that all codes are deleted

PACH AND COMPANY
Home of Telephone Access Control Systems
AEGIS QUANTUM

Phone: 1-888-678-7224
949-498-2951
www.pach-co.com