Proximity Readers (125-kHz)

Farpointe Data Readers
Installation Guide

This Installation Guide is intended for experienced installing technicians. It is a basic reference to ensure all connections are properly made. See the appropriate Product Manual for detailed information on installing Pyramid Series or Cobra readers. These documents may be downloaded from the Farpointe Data website: www.farpointedata.com[1].

All Farpointe Data Readers carry the following certifications:

FCC compliance Statement: This device complies with part 15 of the FCC rules. Operation is subject to the following two conditions:
(1) this device may not cause harmful interference, and
(2) this device must accept any interference received, including interference that may cause undesired operation.

Product can be used without license conditions or restrictions in all European Union countries, including Austria, Belgium, Denmark, Finland, France, Germany, Greece, Ireland, Luxembourg, The Netherlands, Portugal, Spain, Sweden, and the United Kingdom, as well as other non-EU countries, including Iceland, Norway, and Switzerland.

1.0 Cable Requirements

All readers operate at up to 500 feet (152 m) of cable, using seven-conductor, shielded, stranded cable. Per the Security Industry Association's Wiegand specification, AWG 24 (such as Belden 9537) is the minimum gauge required for data transfer in a 500-foot run length. However, the proper wire gauge to use must be determined by the current draw requirements of the reader, the length of the cable run, and the voltage applied to the reader.

If the reader is to be operated at 5 VDC, 5 VDC must be available at the reader (long cable runs have a voltage drop due to the resistance in the cable). A larger gauge of wire (having less resistance) or a separate power supply near the reader may be required to ensure 5 VDC is available at the reader.

12 VDC at the reader is recommended for best operation.

2.0 Output Formats

- Wiegand (industry standard 26-bit Wiegand and custom Wiegand formats)
- Magnetic Stripe (ABA Track II, clock and data, with card present)

3.0 Grounding

- Shield (drain) continuity must run from the reader to the access panel. Shield (drain) and reader ground must be tied together at the access panel and connect to an earth ground at one point.

4.0 Power

- A reader may be powered by the access panel. As such, the reader is powered on when the access panel is powered on. However the best case is to power the reader by a separate, linear power supply. A linear power supply can provide the best read range performance, but a switching power supply may be used if the installer verifies that it does not affect the reader's performance.

5.0 Voltage

- 5 to 14 VDC

[1]Such as models P-300, P-400, P-403, P-405, P-410 or P-453, P-455, P-500, P-503, P-530, P-610, P-700, P-710, EM-30 and EM-50 and their HID and AWID variants.

260 North Wolfe Road
Sunnyvale, CA 94085 USA
Tel: +1-408-731-8700 Fax: +1-408-731-8705
e-mail: info@farpointedata.com
Web: www.farpointedata.com

Farpointe Data
Readers Cards Tags

P/N: 01506-001 - Rev. 1.7

6.0 Multi-Tech Control Line

For either HID or AWID compatible readers (i.e. P-300-H or P-300-A), pulling the orange colored Multi-Tech Control Line low will disable the reader's ability to read either HID or AWID proximity cards or tags.

Alternatively, if the LED Mode Control Card is presented to the reader, then the Multi-Tech Control Line manages the green LED (high=off, low=on).

7.0 fleaPower™ Control Line

Select Farpointe readers can be placed in a special lower power mode by pulling the purple colored fleaPower Control Line low. This special low power mode reduces the average power required by the reader.

8.0 Reader Wiring

Wiegand Operation

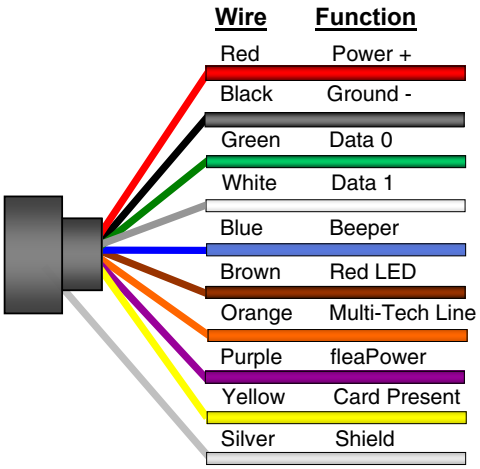

ABA Track II Operation

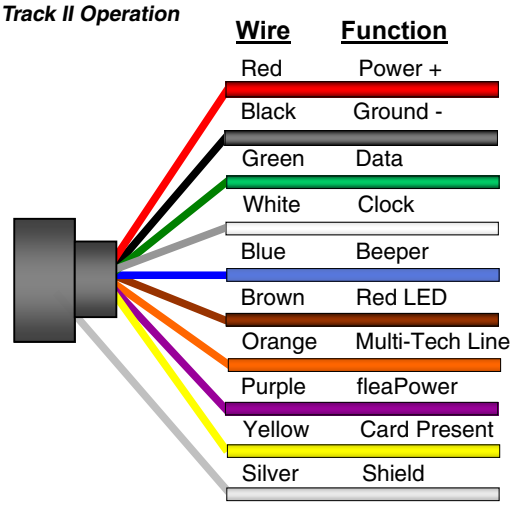

9.0 Troubleshooting

1. When the reader is first powered on it will beep 4-times, and the LED will shine red.
2. Presenting a compatible access credential will result in the reader beeping and the LED flashing once.

NOTE: The access panel controls LED functionality, such as switching to green.

If the reader does not recognize the card or tag (no beep, no LED flash) or exhibits short read range, please see the table below for possible causes and solutions.

Possible Cause	Corrective Action
Incorrect wiring	Verify gauge and wiring connections
Not enough power	12 VDC suggested, 5 VDC at reader is minimum
Incorrect card used	Verify card compatibility
Reader/access panel not properly grounded	Earth Ground needed. Verify shield and reader ground are tied at access panel and connect to ground at one point
Supply generating interference	Linear power supply recommended, verify switching power supply before use

Should any of the corrective actions mentioned above not improve performance, disconnect the reader from the access panel and power it with a separate power supply or 9VDC battery, and re-test card functionality. By powering the readers separately, most variables that may lead to reduced performance can be eliminated. Should the problem persist, please contact Farpointe directly.

260 North Wolfe Road
Sunnyvale, CA 94085 USA
Tel: +1-408-731-8700 Fax: +1-408-731-8705
e-mail: info@farpointedata.com
Web: www.farpointedata.com

Farpointe Data
Readers Cards Tags

P/N: 01506-001 - Rev. 1.7