LOCINOX®

WWW.LOCINOX.COM

CODE: LEKQ-U4

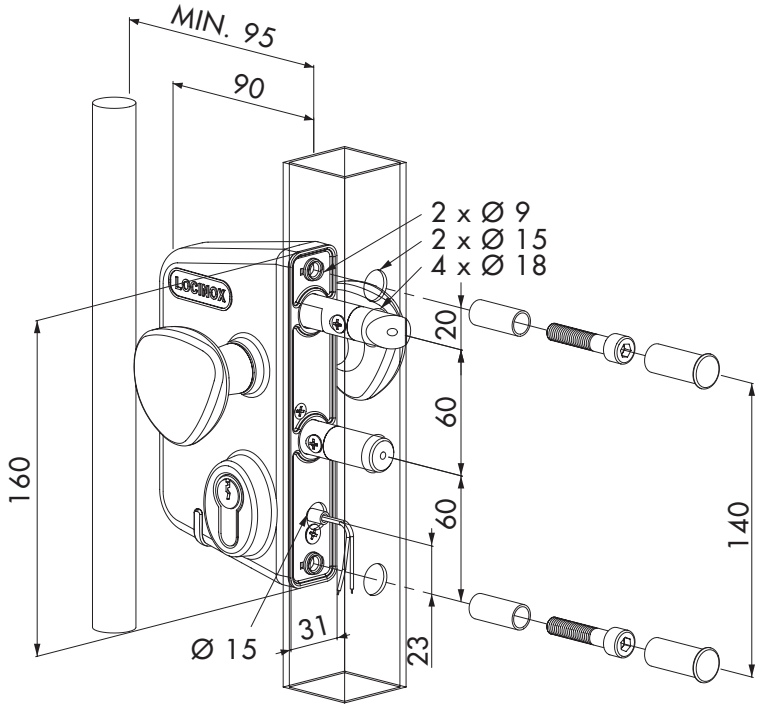

Tube mount application

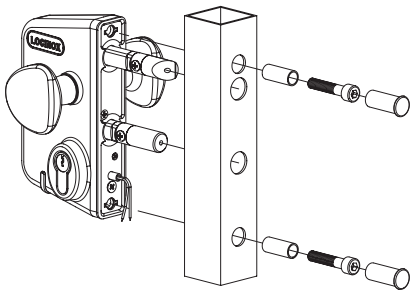

Round mount application

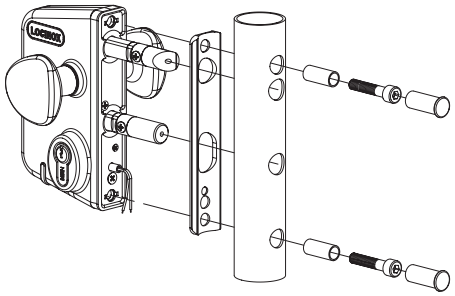

Left / Right

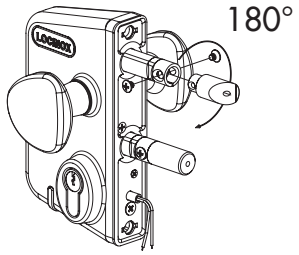

Bolt adjustment 20 mm

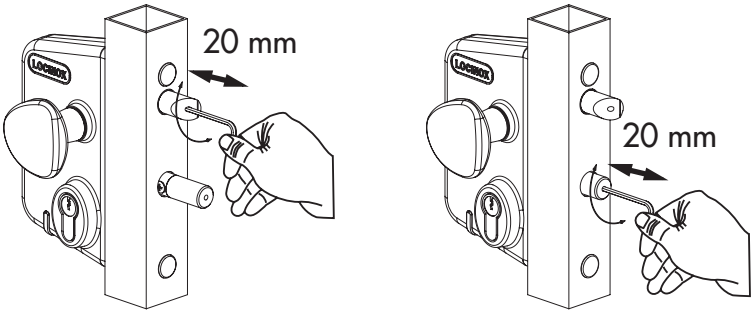

Key operated (B) & Throw (A)

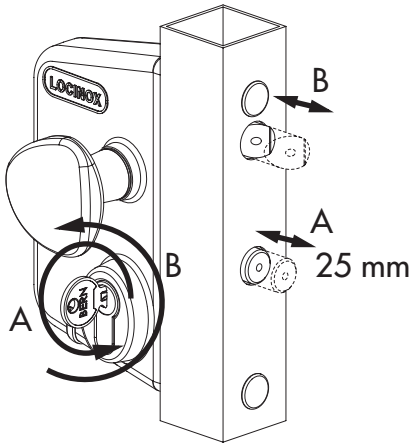

Keeper installation drawing

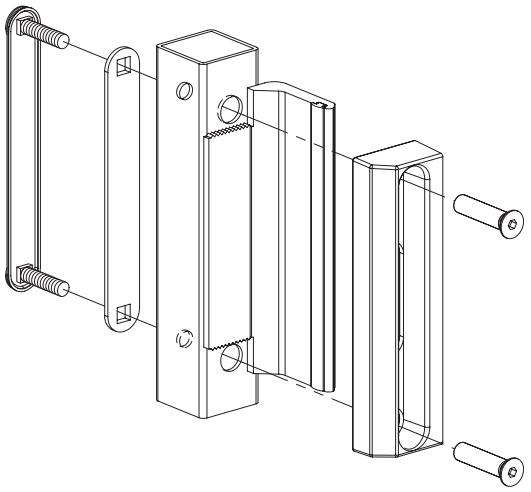

CE

2011-05-11 - rev 0

LOCINOX®

WWW.LOCINOX.COM

Connecting - Raccordement - Aansluiting - Anschließen

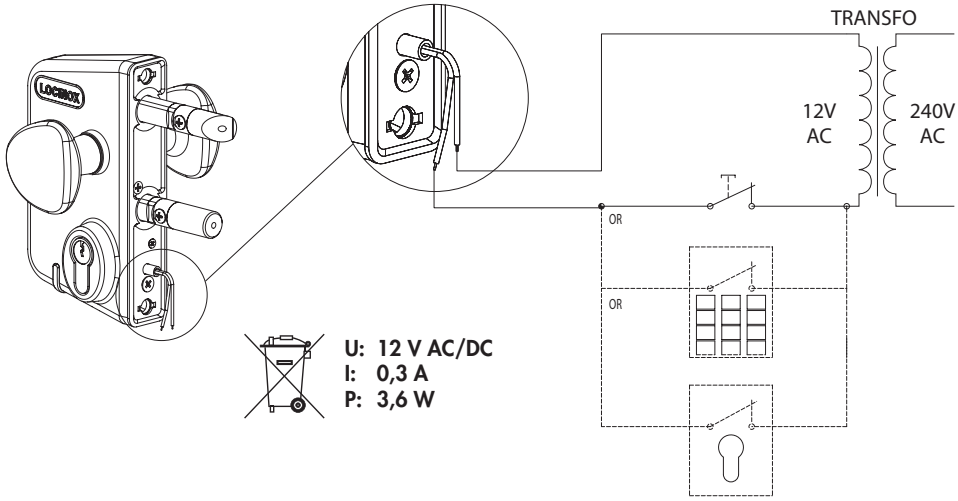

SLOTEN - LOCKS - CERRADURAS - SERRURES

LMKQ V2 | LEKQ U4 | LAKQ U2 | LAKQ H2 | LAKY F2 | LSKZ U2

SLOTVANGERS - KEEPERS - CERRADEROS - GÂCHES

SE.E (EMISSA) | SH (SECURA) | SAKL | SSKZ

KRUKKEN - HANDLES - MANILLAS - POIGNÉES

3006C | 3006M | 3006F | 3006I | 3006R | 3006WS | 3006PUSH

LOCINOX®
WWW.LOCINOX.COM

Doc. Nr.: MANU-000057

Locinox nv • Mannebeekstraat 21 • B-8790 Waregem • Belgium - Europe
Tel. +32 (0)56 77 27 66 • Fax. +32 (0)56 77 69 26 • E-mail: locinox@locinox.com

MANU-000057

CE

2011-05-11 - rev 0